S4J21010

EPSON
EXCEED YOUR VISION

High Resolution EPD Evaluation Platform

■ Overview

The S4J21010 Evaluation Platform is used for the development of high resolution EPD solutions. It provides advanced display functions such as high speed page turning and smooth handwriting. This design package consists of both hardware and software components.

The S4J21010 is an excellent solution for the development of EPD applications using high resolution EPD panels (e-manuals, etc.).

■ Features

- Evaluation Platform for EPD devices targeting business professionals and high performance e-books.
- High quality images with quick response on the larger size, high resolution EPD (> 300dpi).
- Smooth handwriting capability suitable for business and education applications.
- Shorter development time for hardware and service providers who have little or no experience with EPD devices and technologies.
- High performance application CPU, low power system PMIC and advanced EPD controller.

EPD Platform System Block Diagram

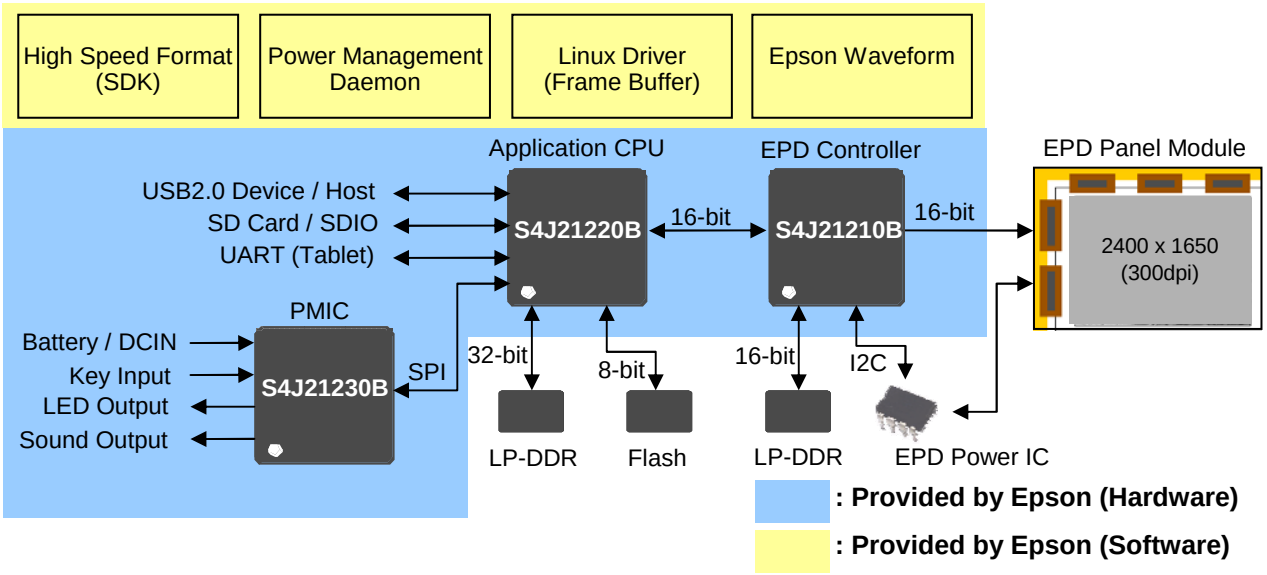

■ Description

- **Display module**
  - High resolution 300dpi EPD panel
  - 9.7 inch 2400 x 1650 support
  - EPSON high speed waveform
- **Chipset**
  - High performance dual core CortexA9 CPU
  - New architecture EPD controller
  - Highly integrated PMIC power source
- **Memory**
  - RAM: LP-DDR
  - ROM: eMMC (Boot memory)
- **Interface**
  - USB device port: USB2.0 high speed
  - USB host port: USB2.0 high speed
  - SD card and SDIO
  - Stereo headphone jack or stereo audio out port
- **User interface**
  - Handwriting: UART tablet interface
  - Key input: 8 switch and a power-on switch
  - LED: 4 (power indicator and status indicator)
- **Software**
  - OS: Linux
  - Boot loader: u-boot
  - Userland : Debian
  - Framework: Qt
  - Kernel drivers
  - Sample applications
  - High speed data format library
- **Operation temperature**
  - Operating: 0 to 40 degrees
  - Storage: -20 to 60 degrees

S4J21010

■ Hardware Block

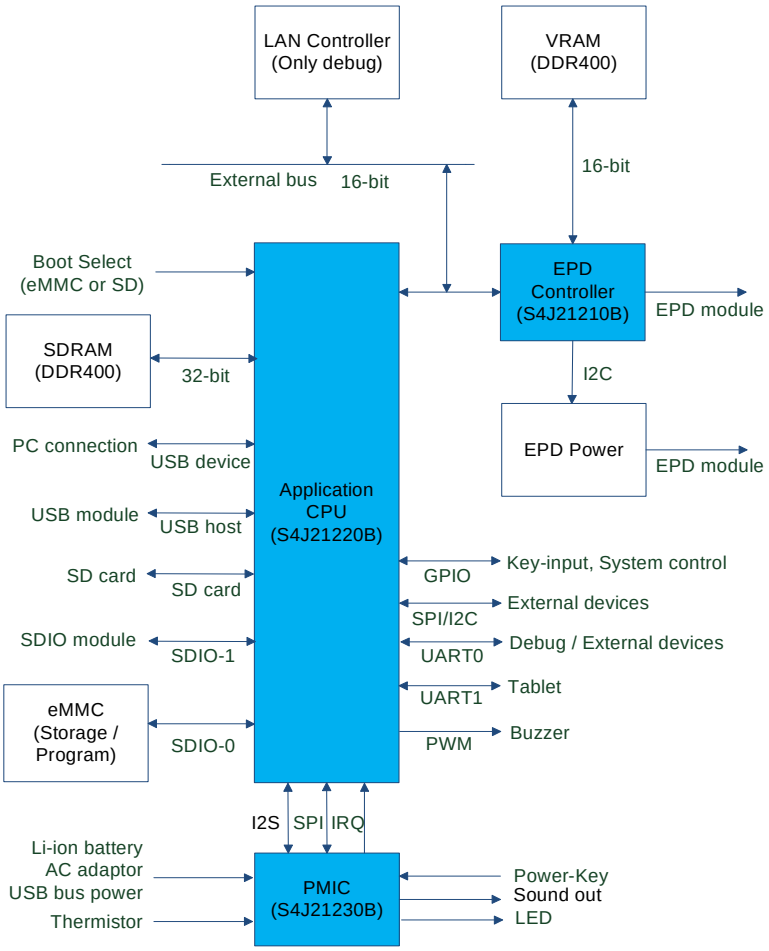

■ Hardware Specifications

- **Application CPU**
  - Epson S4J21220B
  - ARM dual core CortexA9 533MHz CPU
  - Embedded peripherals
- **EPD controller**
  - Epson S4J21210B
  - Frame buffer architecture
  - Epson EPD Dynamic Drive
- **Power management IC (PMIC)**
  - Epson S4J21230B
  - Integrated system power sources
  - Switched DC/USB charger management
  - RTC backup operation
- **Main memory**
  - 256Mbyte, LP-DDR
  - 32-bit bus, DDR400
- **Video memory**
  - 128Mbyte, LP-DDR
  - 16-bit bus, DDR400
- **Program / Storage memory**
  - 8Gbyte, eMMC flash memory
- **External interface**
  - USB 2.0 host port
  - USB 2.0 device port
  - SD card interface
  - SDIO port
  - Stereo headphone jack or stereo audio out port
  - I2C, SPI, UART and GPIO
  - PWM for buzzer
  - A/D converter for temperature measurement
- **EPD panel**
  - Resolution: 9.7 inch 2400 x 1650 pixels
  - Epson waveform driving
- **User interface**
  - Tablet with pen interface
  - 6 push, 2 slide and a power-on switch
  - 4 LED interface
- **Power consumption**
  - Active mode : 1.11 W (Typ.)
  - User-off mode: 7.4 mW (Typ.)
  - System-off mode: 740 μW (Typ.)

■ Software Block

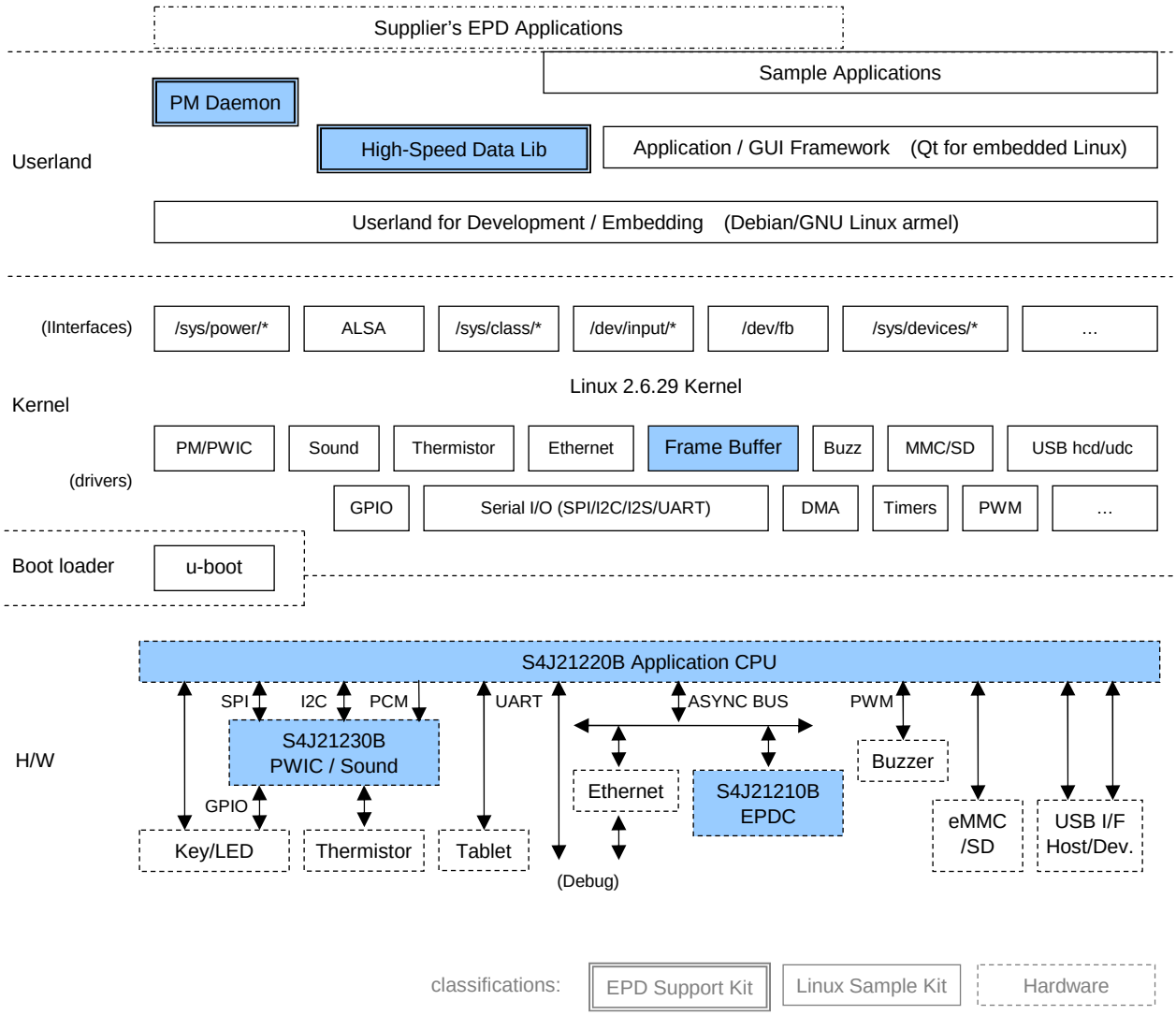

■ Software Specifications

- **Boot loader**
  - U-boot based
- **OS**
  - Linux 2.6.29 based
- **Drivers**
  - Frame Buffer for S4J21210B
  - PM/PWIC
  - GPIO (also supporting Keys, LEDs)
  - Thermistor
  - RTC
  - PWM/Buzzer
  - Sound(ALSA) for S4J21230B
  - Other CPU peripherals
- **Userland (applicable)**
  - Debian GNU/Linux
- **Application framework (applicable)**
  - Qt 4 for embedded Linux
- **EPD support kit**
  - High speed page format library
  - Power Management daemon
- **Sample applications**
  - PDF viewer
  - High speed page turning viewer
  - Application loader
  - Calibration manager

S4J21010

■ Platform Package Contents

- **Documents**
  - S4J21010 design package manual
  - S4J21010 hardware technical manual
  - S4J21010 software technical manual
- **Hardware (Epson provided)**
  - EPD Controller (S4J21210B)
  - Application CPU (S4J21220B)
  - PMIC (S4J21230B)
- **Hardware (Reference design)**
  - Reference board schematics
  - Reference board parts list
  - Reference board design guide
  - Reference board evaluation guide
- **Software (Epson provided)**
  - Kernel Driver : Frame Buffer
  - Daemon : Power manager
  - High speed format (SDK for device: Linux)
  - High speed format (SDK for PC: Windows)
  - EPD control data (binary data)
- **Software (Sample software)**
  - Boot loader (u-boot)
  - Linux kernel (Kernel 2.6.29 and other drivers)
  - Libraries (C libraries, etc)
  - Application framework (Qt)
  - Sample applications (ex. PDF viewer)

■ Evaluation Board

- **Reference board (S5U1J220P00C)**
  - Reference board with Epson chipset
  - 9.7 inch 2400 x 1650 EPD panel
  - 9.7 inch tablet with pen
  - 376 mm x 260 mm x 46 mm

NOTICE:

No part of this material may be reproduced or duplicated in any form or by any means without the written permission of Seiko Epson. Seiko Epson reserves the right to make changes to this material without notice. Seiko Epson does not assume any liability of any kind arising out of any inaccuracies contained in this material or due to its application or use in any product or circuit and, further, there is no representation that this material is applicable to products requiring high level reliability, such as, medical products. Moreover, no license to any intellectual property rights is granted by implication or otherwise, and there is no representation or warranty that anything made in accordance with this material will be free from any patent or copyright infringement of a third party. This material or portions thereof may contain technology or the subject relating to strategic products under the control of the Foreign Exchange and Foreign Trade Law of Japan and may require an export license from the Ministry of Economy, Trade and Industry or other approval from another government agency.

All brands or product names mentioned herein are trademarks and/or registered trademarks of their respective companies.

©Seiko Epson Corporation 2011, All rights reserved.

SEIKO EPSON CORPORATION

MICRODEVICES OPERATIONS DIVISION

Device Sales & Marketing Department
421-8 Hino, Hino-shi, Tokyo 191-8501, JAPAN
Phone: +81-42-587-5814 FAX: +81-42-587-5117

EPSON semiconductor website
http://www.epson.jp/device/semicon_e/

Document code: 412028401
Update issue June, 2011 in Japan